TOSHIBA Intelligent Power Module Silicon N Channel IGBT

MIG50Q7CSB1X (1200V/50A 7in1)

High Power Switching Applications

Motor Control Applications

- Integrates inverter, brake power circuits and control circuits (IGBT drive units, protection units for short-circuit current, over current, under voltage and over temperature) in one package.
- The electrodes are isolated from case.
- $V_{CE\ (sat)}$ = 2.2 V (typ.)
- UL recognized File No. E87989
- Weight: 278 g (typ.)

Equivalent Circuit

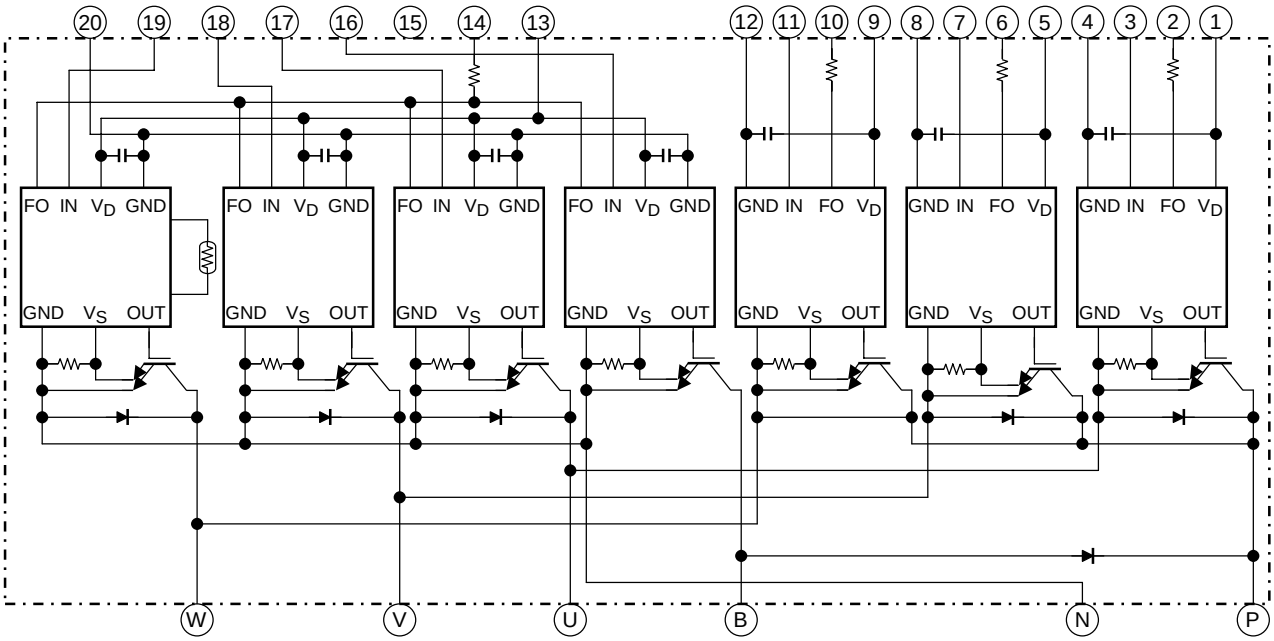

1.	V_D (U)	2.	FO (U)	3.	IN (U)	4.	GND (U)	5.	V_D (V)	6.	FO (V)	7.	IN (V)
8.	GND (V)	9.	V_D (W)	10.	FO (W)	11.	IN (W)	12.	GND (W)	13.	V_D (L)	14.	FO (L)
15.	Open	16.	IN (B)	17.	IN (X)	18.	IN (Y)	19.	IN (Z)	20.	GND (L)		

Package Dimensions: TOSHIBA 2-108G1A

Unit: mm

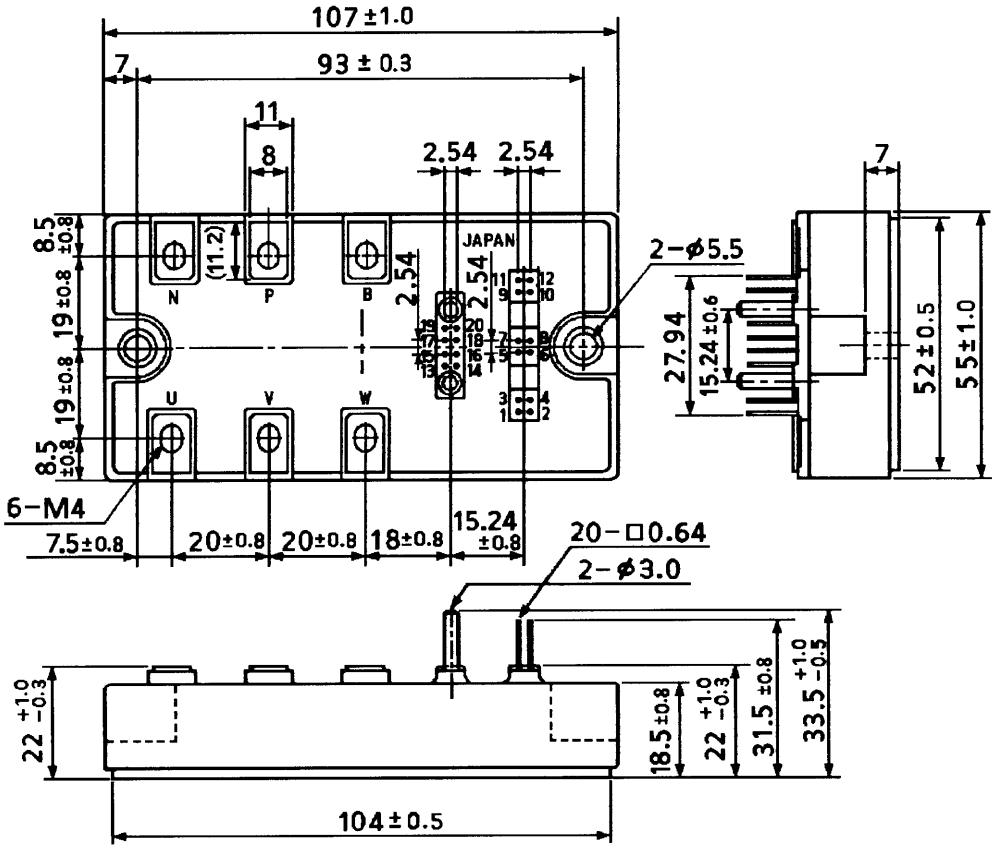

1.	V_D (U)	2.	FO (U)	3.	IN (U)	4.	GND (U)	5.	V_D (V)	6.	FO (V)
7.	IN (V)	8.	GND (V)	9.	V_D (W)	10.	FO (W)	11.	IN (W)	12.	GND (W)
13.	V_D (L)	14.	FO (L)	15.	Open	16.	IN (B)	17.	IN (X)	18.	IN (Y)
19.	IN (Z)	20.	GND (L)								